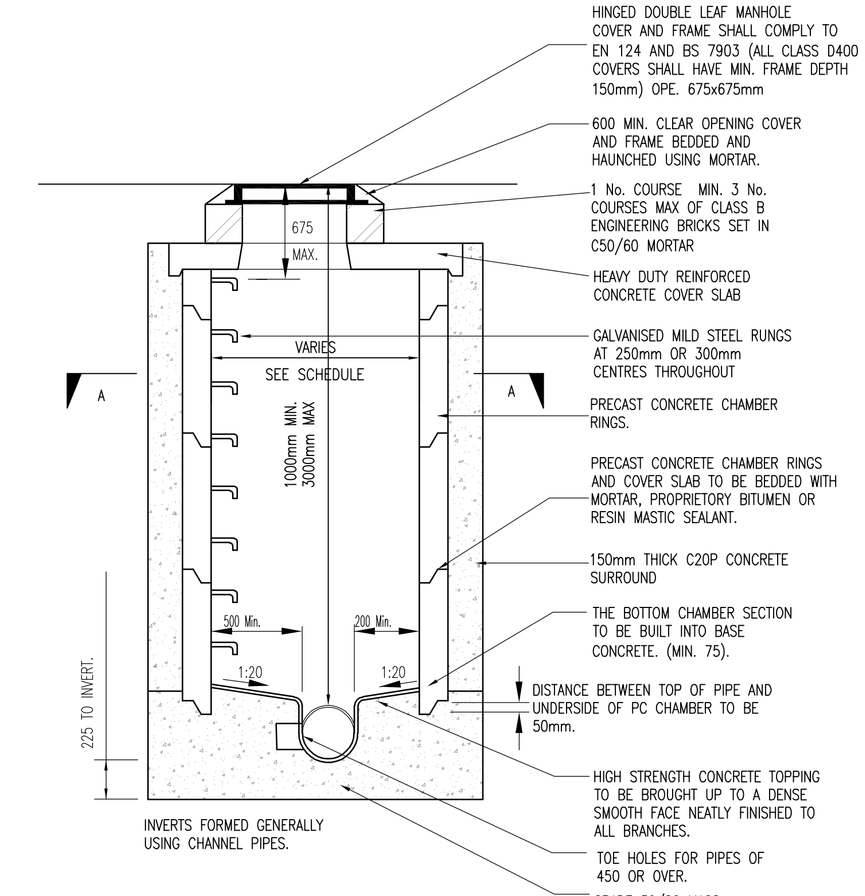

PRECAST CONCRETE RING MANHOLE DETAIL TYPE J (GDSDS) (1–3m DEEP)

SCALE 1:25

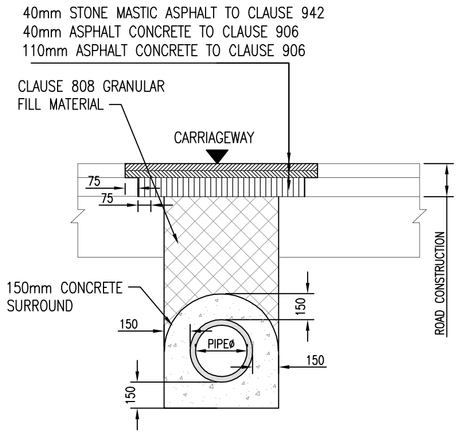

TYPICAL PIPE BEDDING DETAILS (UNDER EXISTING ROADWAY) LESS THAN 1200mm TO PIPE CROWN

SCALE 1:25

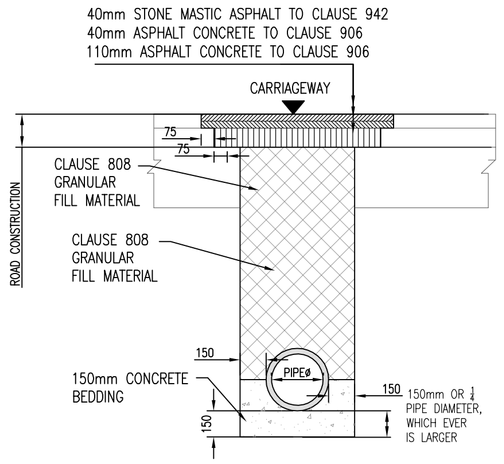

TYPICAL PIPE BEDDING DETAILS (UNDER EXISTING ROADWAY) GREATER THAN 1200mm TO PIPE CROWN

SCALE 1:25

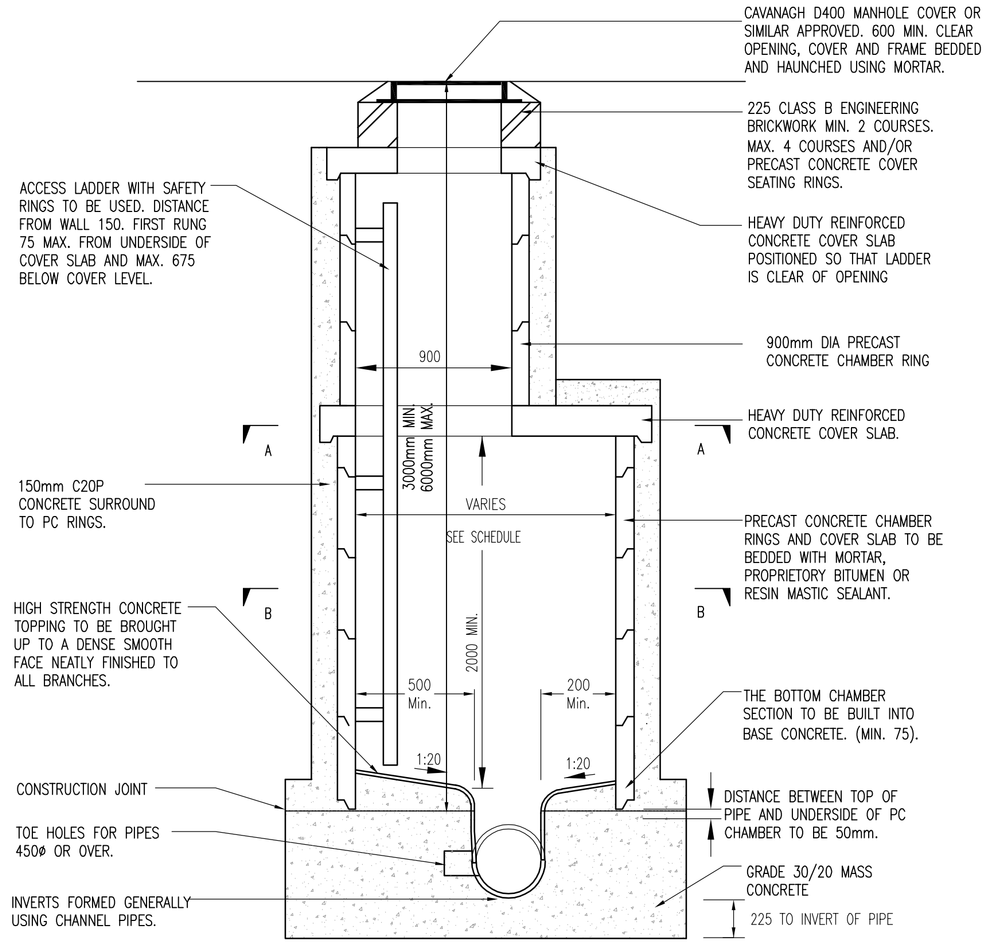

PRECAST CONCRETE RING MANHOLE TYPE K (GDSDS) (3–6m DEEP)

SCALE 1:25

NOTES:

1. DO NOT SCALE. USE FIGURED DIMENSIONS ONLY.
2. THIS DRAWING IS TO BE READ IN CONJUNCTION WITH ALL OTHER RELEVANT ARCHITECTURAL AND ENGINEERING DRAWINGS.
3. TYPE A GRANULAR FILL SHALL CONSIST OF WASHED PEA GRAVEL. ALL MATERIAL SHALL PASS A 19mm B.S. SIEVE TEST AND SHALL BE RETAINED BY A 4.75mm B.S. SIEVE TEST.
4. SELECTED FILL SHALL BE FREE FROM STONES GREATER THAN 25mm IN SIZE, BUILDERS RUBBLE VEGETABLE MATTER AND LUMPS OF CLAY GREATER THAN 75mm IN SIZE AND SHALL BE COMPACTED IN 150mm LAYERS.
5. IN OPEN SPACES BACKFILL SHALL CONSIST OF SUITABLE SELECTED EXCAVATED MATERIAL. UNDER PAVED AREAS BACKFILL SHALL CONSIST OF SUITABLE APPROVED GRANULAR FILL. GENERAL BACKFILL SHALL BE COMPACTED IN LAYERS NOT EXCEEDING 300mm THICK.
6. CONCRETE BED AND SURROUND SHALL BE USED ON ALL PIPES WHERE COVER TO THE SOFFIT OF THE PIPE IS LESS THAN 1.2m IN ROADS, FOOTPATHS AND GRASS MARGINS AND 0.9m IN OPEN SPACES AND FIELDS.
7. ALL CONCRETE FOR PIPE BEDDING, HAUNCHING AND SURROUNDS SHALL BE GRADE 20N/20.
8. ALL MANHOLES SHALL BE WATERTIGHT TO THE SATISFACTION OF THE ENGINEER.
9. FORMWORK TO REINFORCED CONCRETE AND MASS CONCRETE SHALL BE CLASS F2.
10. CLASS U2 FINISH TO THE TOP OF SLABS. REINFORCEMENT TO SLABS TO ENGINEERS DETAILS.
11. 200mm THICK CL. 30/20 MASS CONCRETE FOUNDATIONS. 225 THICK PRECAST R.C. ROOF SLAB IN CL 30/20 CONCRETE. COVER TO STEEL TO BE 40mm.
12. TOE HOLES TO BE PROVIDED IN BENCHING OF SEWERS GREATER THAN 450mm DIAMETER FOR ACCESS TO INVERT. SAFETY CHAIN ON SEWERS 600mm. DIAM. OR GREATER MILD STEEL SAFETY CHAIN SHALL BE 10MM. NOMINAL SIZE GRADE M(H) NON CALIBRATED CHAIN, TYPE 1, COMPLYING WITH BS4942 PART 2.
13. WHEN DEPTH OF MANHOLES TO INVERT IS GREATER THAN 3.5m, LADDERS SHALL BE USED INSTEAD OF RUNGS. FIXED LADDERS SHOULD MEET THE DIMENSIONAL REQUIREMENTS OF BS4211 EXCEPT THAT STRINGERS SHOULD NOT BE LESS THAN 65 X 20mm IN SECTION AND RUNGS 25mm IN DIAMETER.
14. LADDER STRINGERS SHOULD BE ADEQUATELY SUPPORTED FROM THE MANHOLE WALL AT INTERVALS OF NOT MORE THAN 3.0m STRINGERS SHOULD BE BOLTED TO CLEATS TO FACILITATE RENEWAL.
15. ALL LADDERS, RUNGS, HANDRAILS, SAFETY CHAIN, ETC. SHALL BE HOT DIPPED GALVANISED TO BS729.
16. ALL WORKS TO BE CARRIED OUT IN ACCORDANCE WITH THE REQUIREMENTS OF SOUTH DUBLIN COUNTY COUNCIL.

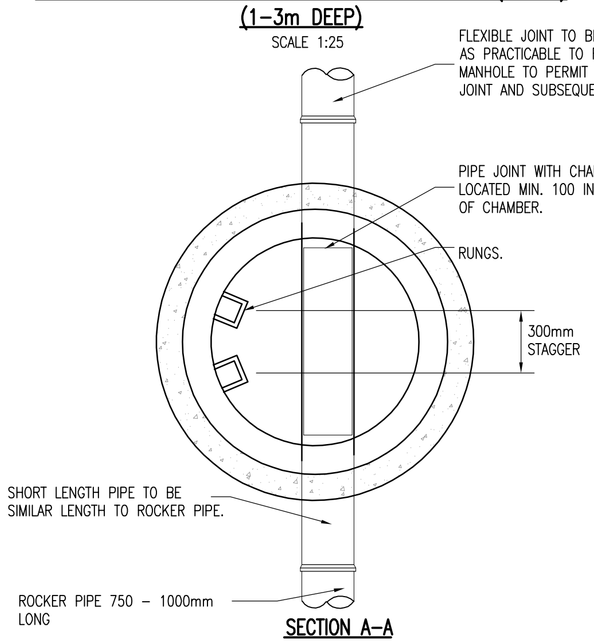

SECTION A–A

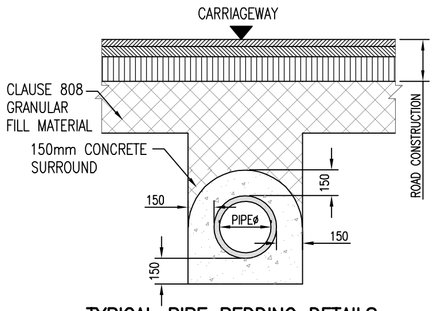

TYPICAL PIPE BEDDING DETAILS (UNDER PROPOSED ROADWAY) LESS THAN 1200mm TO PIPE CROWN

SCALE 1:25

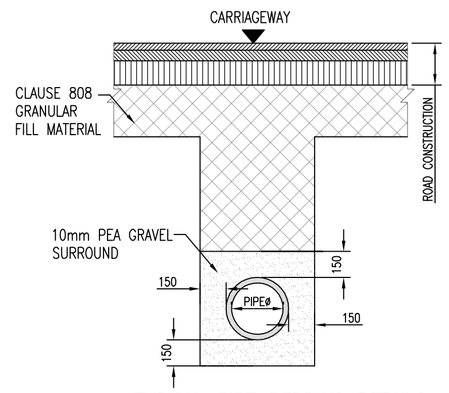

TYPICAL PIPE BEDDING DETAILS (UNDER PROPOSED ROADWAY) GREATER THAN 1200mm TO PIPE CROWN

SCALE 1:25

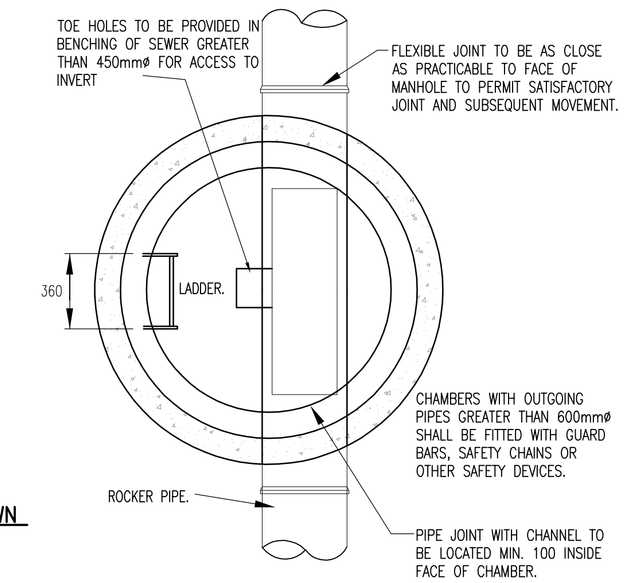

SECTION B–B

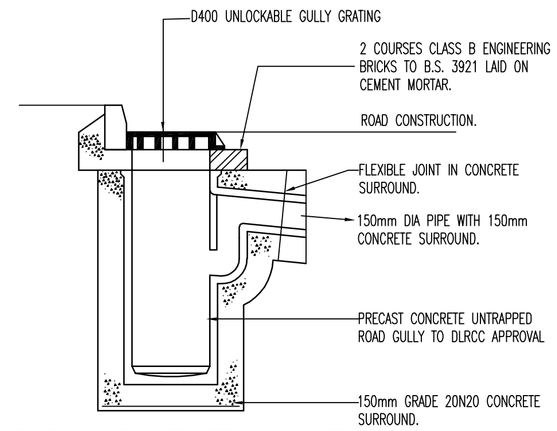

RECTANGULAR UNTRAPPED GULLY DETAIL

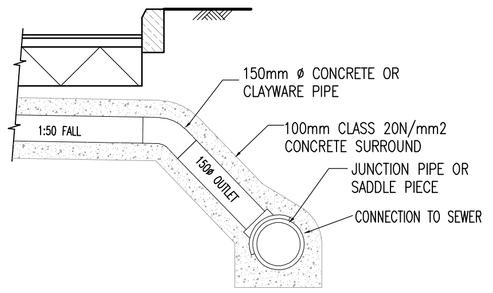

TYPICAL SADDLE CONNECTION

SCALE 1:25 @ A1

PIPE DIAMETER	ROCKER PIPE LENGTH
150 – 450	0.5 – 0.75
451 – 750	0.75 – 1.0
750 >	SEEK GUIDANCE

DIAMETER OF LARGEST PIPE IN MANHOLE	PRECAST CONCRETE RING SIZE
LESS THAN 375mm	1200mm DIA
375mm TO 450mm	1350mm DIA
500mm TO 700mm	1500mm DIA
750mm TO 900mm	1800mm DIA
950mm TO 1200mm	2100mm DIA
1250mm AND ABOVE	2400mm DIA

NORMAL INTERNAL DIAMETER	MINIMUM TRENCH WIDTH mm	MAXIMUM TRENCH WIDTH mm
100	450	650
150	500	700
225	600	800
300	700	900
375	950	1150
450	1050	1250
525	1150	1350
600	1250	1450
675	1350	1550
750	1400	1600
825	1500	1700
900	1950	2150
1050	2100	2300
1200	2300	2500
ABOVE 1200	PIPE DIAMETER PLUS 800mm	OUTSIDE DIAMETER PLUS 1000mm

MAXIMUM AND MINIMUM TRENCH WIDTHS

BACKDROP MANHOLE DETAILS FOR PIPE DIAM'S. 225, 300, 375, 450, 525, 600, 750MM DROP > 750MM.

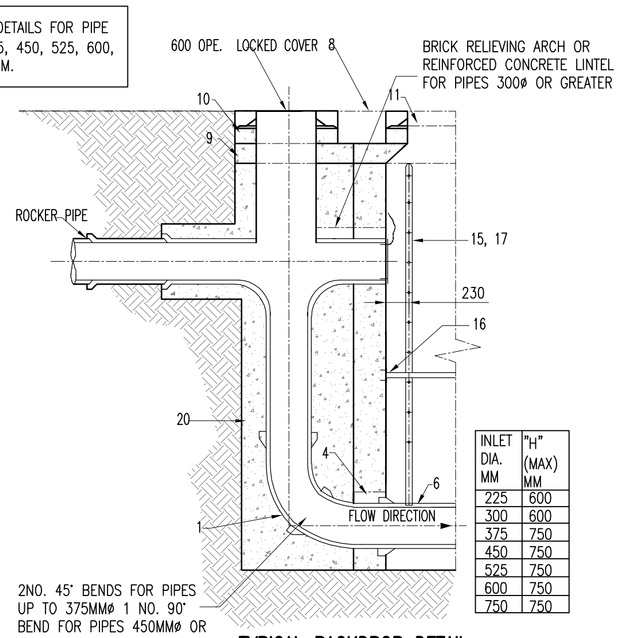

INLET DIA. MM	"H" (MAX) MM
225	600
300	600
375	750
450	750
525	750
600	750
750	750

TYPICAL BACKDROP DETAIL

SCALE 1:50

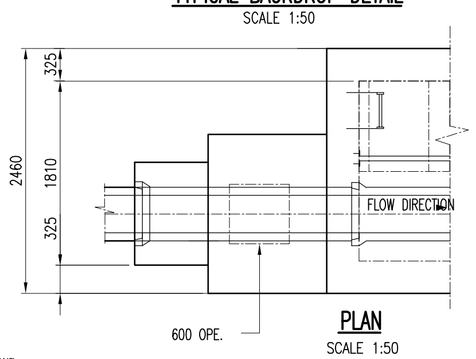

PLAN

SCALE 1:50

1. 225MM THICK Cl.20N/20MM MASS CONCRETE FOUNDATIONS
2. PREFORMED HALF CIRCLE CHANNEL PIPES. THE PIPELINE MAY, WHERE PRACTICABLE, BE LAID THROUGH THE MANHOLE AND THE CROWN CUT OUT TO HALF DIAMETER, PROVIDED FLEXIBLE JOINTS ARE SITUATED ON EACH SIDE NO FURTHER THAN 600MM FROM THE INNER FACE OF MANHOLE WALL.
3. MANHOLE CONSTRUCTION:
   (A) FOR SURFACE WATER MANHOLES HIGH–DENSITY BLOCKS TO Cl.S10 OF IS.20 PART 1:1987 OR Cl.30N/20MM INSITU CONCRETE
   (B) BLOCK WORK SHALL BE BEDDED AND JOINTED USING MORTAR TOIS406. BEDS AND VERTICAL JOINTS SHALL BE COMPLETELY FILLED WITH MORTAR AS THE BLOCKS ARE LAID.
   (C) JOINTS SHALL BE FLUSH POINTED AS THE WORK PROCEEDS.
   (D) ALL FOUL MANHOLES MUST BE FACED IN SOLID ENGINEERING BRICK(MIN CLASS A OR B), OR INSITU CONCRETE FOR 1 METER ABOVE BENCHING LEVEL.
   (E) BRICK TO BE BONDED TO BLOCK WORK USING ENGLISH GARDEN WALL BOND.
4. RELIEVING ARCH FORMED BY 215X103X65 SOLID ENGINEERING BRICK CLASS A OR B AS PER DRAWING. RELIEVING ARCHES USED IN BRICK OE BLOCK WORK MANHOLES EXTEND OVER FULL THICKNESS OF WALL. A DOUBLE ARCH IS TO BE FORMED FOR PIPE DIAMETERS GREATER THAN 600MM.
5. BENCHING AND PIPE CHANNEL PIPE SURROUND – Cl.20/20 CONCRETE.
6. BENCHING FINISHED IN 2:1 SAND CEMENT MORTAR WITH A SMOOTH TROWEL FINISH, AT 1 IN 30 SLOPE TOWARDS CHANNEL.
7. STANDARD RUNGS AT 300C/C VERTICALLY AND GALVANISED TO THE LATEST VERSION OF B.S 729 OR EQUIVALENT. NOTE STEPS IRONS ARE NOT ACCEPTABLE.
8. 600MM SQUARE OPEN IN ROOF SLAB.
9. PRECAST R.C ROOF SLAB SHALL BE 200MM THICK IN CLASS 30N/20MM, WITH 40MM COVER TO STEEL.
10. 1 TO 2 COURSES OF SOLID ENGINEERING BRICKS Cl.B TO I.S.91:1983 SET IN 1:3(CEMENT AND MORTAR)
11. CLASS D400 OR E600 MANHOLE COVER AND FRAME TO IS/EN 124. 150MM DEEP FRAME FOR ROADS AND 100MM DEEP FOR FOOTHPATHS AND GREEN AREAS. NON–ROCK DESIGN, CLOSED KEYWAYS, MANUFACTURED FROM SPHERIODAL GRAPHITE CAST IRON(DUCTILE CAST IRON), 600 X 600(600 DIA)CLEAR OPENING, COVER AND FRAME COATED IN BITUMEN OR OTHER APPROVED MATERIAL, COVER TO HAVE A MIMIMUM MASS OF 140KG/M², FRAME BEARING AREA SHALL BE 80,000MM² MIN, FRAMES SHALL BE DESIGNED TO PREVENT COVERS FALLING INTO MANHOLE. FRAMES SHALL BE BEDDED ON APPROVED MORTAR TO MANUFACTURES INSTRUCTIONS.
12. SHORT LENGHT PIPE AND PIPE JOINT EXTERNAL TO MANHOLE SHALL NOT EXCEED 600MM FROM THE INNER FACE OF MANHOLE WALL.
13. TOE HOLES OF 230MM MIMIMUN DEPTH AND GALVANISED STEEL SAFETY RAILINGS TO BE PROVIDED IN BENCHING OF SEWERS GREATER THAN 525MM DIAMETER AND DEPTH TO INVERT >3M FOR ACCESS TO INVERT.
14. A SAFETY CHAIN IS TO BE PROVIDED ON PIPES THAT EXCEED 450MM IN DIAMETER. MILD SAFETY CHAIN SHALL BE 10MM NOMINAL SIZE GRADE M(H) NON–CALIBRATED CHAIN, TYPE 1, COMPLYING WITH B.S.4942 PART 2 OR EQUIVALENT.
15. WHEN DEPTH OF MANHOLES TO INVERT IS GREATER THAN 3.0M LADDERS SHALL BE USED INSTEAD OF RUNGS TO B.S.4211 OR EQUIVALENT EXCEPT THAT STRINGERS SHOULD BE NOT LESS THAN 65 X 12MM IN SECTION AND RUNGS 25MM IN DIAMETER. FIXED LADDERS SHOULD MEET THE DIMENSIONAL REQUIREMENTS OF B.S.4211 OR EQUIVALENT.
16. LADDER STRINGERS SHOULD BE ADEQUATELY SUPPORTED FROM THE MANHOLE WALL AT INTERVALS OF NOT MORE THAN 2.0M STRINGERS SHOULD BE BOLTED TO CLEATS TO FACILITATE RENEWAL.
17. ALL LADDERS, RUNGS, HANDRAILS, SAFETY CHAINS ETC. SHALL BE HOT DIP GALVANISED TO B.S.729 OR EQUIVALENT.
18. PIPE SHOULD BE CUT FLUSH WITH WITH THE INSIDE SURFACE OF THE MANHOLE WALL SO THAT THE CHANNEL EXTENDS THE FULL LENGTH OF THE MANHOLE(EXCEPT FOR PRECAST MANHOLES)

NOTE: ALL FOUL WATER DRAINAGE TO IRISH WATER CODE OF PRACTICE AND CONSTRUCTION DETAILS

19. POSITION OF 910 SQUARE OPE IN INTERMEDIATE ROOF SLAB.
   (A) ALL MANHOLES SHALL BE WATERTIGHT TO THE SATISFACTION OF THE ENGINEER.
   (B) FORMWORK TO REINFORCED CONCRETE AND MASS CONCRETE SHALL COMPLY WITH CLASS 2, SECTION 6.2.7, B.S.8110 PART 1 : 1997.
   (C) FINISH TO THE TOP OF SLABS SHALL COMPLY WITH TYPE A, SECTION 6.2.7 B.S.8110 : PART 1:1997.
   (D) PLAN DIMENSIONS OF MANHOLES ARE BASED ON BLOCK WORK HAVING A CO–ORDINATING SIZE OF 450 X 225 X 100.
   (E) MANHOLES ARE DESIGNED TO B.S.8005 AND WALL THICKNESS TO LS.325 BLOCK WORK DESIGN CODE TAKING GRANULAR FILL PRESSURE AND H.B SURCHARGE.
   (F) RE–INFORCEMENT TO SLABS TO ENGINEERS DETAILS.
20. FOR MANHOLES >3M DEPTH TO INVERT USE 30N/20MM INSITU CONCRETE. RE–INFORCING MESH REF. A393 @ 6.16KG/M TO BE FIXED AT MID POINT OR WALL. ADDITIONAL RE–INFORCEMENT TO BE SUPPLIED OVER PIPE CROWN.
21. FOR PRE–CAST MANHOLES, CHAMBER WALLS AND COVER SLAB TO BE CONSTRUCTED TO IS EN 1917 AND IS 420 2004.
22. MANHOLE OPENINGS TO BE SITUATED FURTHEST FROM NEARTEST CARRAIGEWAY. MANHOLE STEPS/ACCESS TO BE POSITIONED TO ALLOW VIEWING OF ONCOMING TRAFFIC.
23. FOR BEDDING AND SEALING OF CHAMBER RINGS, THE TOP RING(TO PRE–CAST COVER SLAB) AND BOTTOM RING TO BE BEDDED WITH CEMENT MORTAR. FOR INTERMEDIATE RINGS, JOINTS TO BE SEALED WITH APPROVED PRE–FORMED JOINTING STRIP.
24. PRE–CAST MANHOLES TO BE SURROUNDED WITH A MINIMUM OF 150MM THICK GRADE C20/40 CONCRETE.

GENERAL NOTES :

1. ALL BRICK TO BE SOLID ENGINEERING BRICK CLASS A OR B
2. FOR PIPE DIAMETER >750MM USE MANHOLE WITH INTERNAL DIAMETER SIZE =PIPE SIZE + 1 METER + 300MM.
3. DISTANCE FROM THE TOP RUNG OF THE LADDER TO GROUND LEVEL MUST BE A MAXIMUM OF 500MM.

NOTES :

1. MANHOLE DETAILS FOR PIPE DIAM'S. 150, 225, 300, 375, 450, 525, 600, 750 DROP < 750MM
2. WHEN THE DROP 'H' IS GREATER THAN THE MAX VALUE SHOWN USE BACKDROP MANHOLE.

REV.	DATE	AMENDMENT	DRN	APPD

STATUS **FOR PLANNING NOT FOR CONSTRUCTION**

Waterman Moylan
Engineering Consultants
Block S, EastPoint Business Park, Alfie Byrne Road,Dublin D03 H3F4
Tel: (01) 664 8900 Fax: (01) 661 3618
Email: info@waterman-moylan.ie www.waterman-moylan.ie

CLIENT GERARD GANNON

ARCHITECT WILSON ARCHITECTURE

PROJECT QUICKPARK CAR PARK AT TURNAPIN GREAT, SWORDS ROAD

TITLE DRAINAGE CONSTRUCTION DETAILS SHEET 1 OF 2

DRAWN	DESIGNED	APPROVED	DATE
PJD	PJD	MD	SEPT 18'
SCALE AS SHOWN @ A1	JOB NO. 15–194	DRG. NO. P025	REVISION

© 2017. This drawing is copyright. No part of this document may be re-produced or transmitted in any form or stored in any retrieval system of any nature without the written permission of the consulting engineer as copyright holder except as agreed for use on the project for which the document was originally issued.